INDUSTRIAL MECHANICAL SPECIALTIES S.A. FROM C.V.

FILTERS TYPE T

MOD. 201-FT.

T filters EMI brand, offering simplicity, low cost and great versatility in design that goes from the body to the basket. They are used in continuous operation in industrial processes.

The line is offered in a wide range of sizes, construction materials, baskets and type of connections that make it versatile, economical and highly efficient.

Fabrication material:

- Carbon steel ASTM A234 WPB.
- ASTM A403 Stainless Steel TYPE (304) and (316).

Connections Inspection:

- ASTM A-105.
- DN 25 to DN 600.

Or design operating pressure:

- 150 to 300 psi.

INDUSTRIAL MECHANICAL SPECIALTIES S.A. FROM C.V.

FILTERS TYPE T

MOD. 201 FT 150 psi

DN	TO	B	C
one	3"	3 11/16 "	7 3/8 "
1 1/2	4 1/2 "	4 11/16 "	9 3/8 "
two	5"	5"	10 "
3	6 3/4 "	6 1/8 "	12 1/4 "
4	8 1/4 "	7 1/8 "	14 1/4 "
6	11 1/4 "	9 1/8 "	18 1/4 "
8	14 "	eleven"	22 "
10	17 "	12 1/2 "	25 "
12	twenty"	14 1/2 "	29 "
14	22 "	16 "	32 "
16	24 "	17 "	3. 4"
18	27 "	19 "20	38 "
twenty	30 "	20 11/16 "	41 3/8 "
24	3. 4"	2. 3"	46 "

Mod. 201 FT-150/300

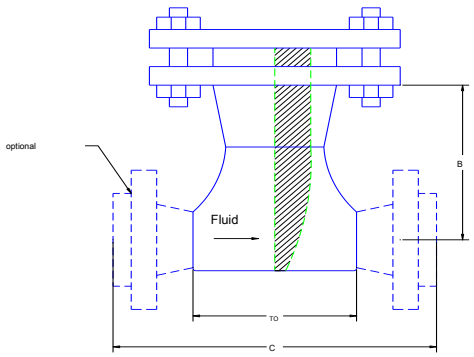

INDUSTRIAL MECHANICAL SPECIALTIES S.A. FROM C.V.

FILTERS TYPE T

WARRANTY

We are pleased that we are a 100% Mexican company manufacturer of its own brand, **"EMI".** We manufacture and put at your disposal the following equipment:

- Quick Connect or adaptations (For loading).
- Canasta filters (simplex and duplex).
- Filters "Y".
- Filters "T".
- Flow indicators (peepholes).
- Security equipment (Showers and Eyewash).
- Blade valves (Type Dump, Intern, and Puerto in "V").
- Pinch valves (fitting type, Spillway and Pneumatics).

EMI warrants its products against defects in workmanship, quality of materials or workmanship for 18 months from date of shipment from our warehouse or a year in operation.

This warranty is to repair the defective product in service conditions recommended by the manufacturer. The warranty is not valid when the article has been disassembled and / or repaired by unauthorized personnel.

In no event shall the manufacturer responsible for declining profits, losses plant unemployment, increased operating costs or other consequential damages item usage.

The illustrations in this catalog are representations of a model of each product line, but do not necessarily represent the entire line **EMI** in detail.

EMI It reserves the right to make changes in materials, design and specifications without notice, in accordance with a policy of product improvement.